XE135CR EV

Electric Hydraulic Excavator

1. It is suitable for narrow construction conditions
2. It can operate continuously for 4-7 hours and supports dual plug fast charging
3. Automatic sound and light alarm, high level of intelligence
4. Customized operating components that fit the human body, providing strong comfort

- Operating weight (kg) : 17000
- Bucket capacity (m³) : 0.52
- Rated power (kW) : 80

Never attempt to lift or hold any load in excess ofthe rated lifting capacity at the specifiedlifting radius and height. The lifting point is located on the lifting eye ofthe arm(Bucketweight is not included), any additional attachment such as bucket should be deducted fromthe lifting weight. When determining the net lifting weight allowed for the machine, theweight ofthe slings and any auxiliary lifting.devices must be deducted from the rated liftingcapacity. Lifting capacity is based on the machine standing on firm and level ground. Theoperator should consider working conditions such as soft oruneven ground. Beforeoperating the machine, the operator should familiarize himself with the safety procedures inthe relevant manual.

kg — Dozer Blade up

In travel direction — Against travel direction — Right angle to travel direction

LD	Y \ X	1.5m			3.0m			4.5m			6.0m			MAX			
																	m
2.52m	Z2							*2580	*2210	*2390	2090	*2390	1520	6.70
	Z1				*3740	3540	*2940	2280	2075	1330	2075	1280	7.20
	Z3	*2980	*2980	*4620	2720	*2950	1550	1950	1050	2490	1570	6.60

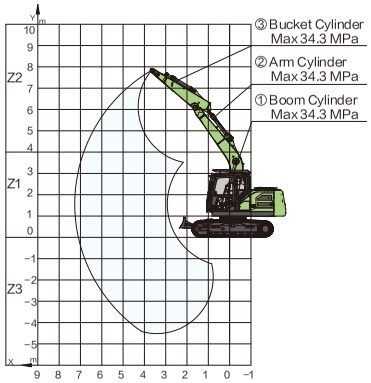

Note 1 The lifting capacities in the table refer to the case where no external thrust intervention is included.
Note 2 Lifting capacities marked with an asterisk (*) in the table are limited by hydraulic capacity and should not exceed 75% of the minimum tipping load or 87% of the hydraulic capacity.
Note 3 The least stable position is on the side of the excavator.
Note 4 The lifting capacity table applies only to machines originally built and normally assembled by the manufacturer.
Note 5 The machine is rated for an operating weight of 17000 kg (37480 lb), which includes 0.5 m (1.64 ft) steel tracks, a 4.6 m (15.1 ft) boom, a 2.52 m (8.3 ft) arm, a 270 kg (595 lb) counterweight, all working fluids, and a 75 kg (165 lb) operator, exclusive of the bucket.
Note 6 Lifting capacity shall be in accordance with ISO 10567:2007.
Note 7 For all configurations of track specifications, the lifting capacity is kept within ± 5%.

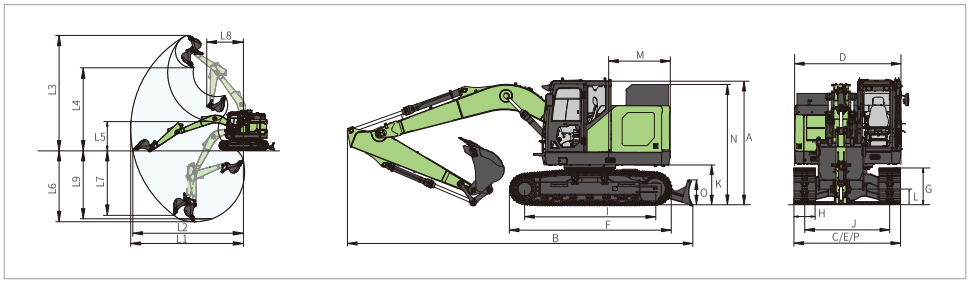

Item contents	Unit	Parameters
Working range		
L1 Maximum reach	mm	8590
L2 Maximum reach at GRP	mm	8431
L3 Maximum digging height	mm	8755
L4 Maximum unloading height	mm	6300
L5 Minimum unloading height	mm	2200
L6 Maximum digging depth	mm	5425
L7 Maximum vertical digging depth	mm	4930
L8 Minimum swing radius	mm	2785
L9 8 ft. level floor digging depth	mm	5213
L10Maximum lifting height of dozer blade	mm	669
L11Maximum cutting depth of dozer blade	mm	368

Item contents	Unit	Parameters
Dimensions		
A Overall height	mm	3140
B Overall length	mm	8140
C Overall width	mm	2490
D Upper structure width	mm	2490
E Undercarriage width	mm	2490
F Track length	mm	3734
G Track height	mm	837
H Standard track shoe width	mm	500
I Track wheelbase	mm	2997
J Track gauge	mm	1990
K Counterweight ground clearance	mm	943
L Minimum ground clearance	mm	477
M Rear-end swing radius	mm	1795
N Hood height	mm	2810
O Dozer blade height	mm	566
P Dozer blade width	mm	2490

Item contents	Unit	Parameters
Operating weight	kg	17000
Motor		
Motor type	-	Permanent magnet synchronous motor
Rated power	kW	80
Max torque	N·m	850
Cooling method	-	Liquid cooling
Battery pack		
Battery type	-	Lithium iron phosphate
Battery voltage	V	656
Battery capacity	kWh	262
Heating method	-	Liquid heating
Cooling method	-	Liquid cooling
Hydraulic system		
Main pump	-	2 × Variable pumps
Pilot pump	-	1 × Gear pump
PTO pump	-	1 × Gear pump
Maximum flow rate of main system	L/min	2 × 130
PTO pump flow rate	L/min	53
Main system pressure	MPa	34.3
PTO pump pressure	MPa	23
Main system pressure (power-max pressure)	MPa	37
Pilot system pressure	MPa	3.9
Travel system pressure	MPa	34.3
Swing system pressure	MPa	25
Main performance		
Travel speed (high/low)	km/h	4.7/2.9
Swing speed	r/min	11.3
Maximum swing torque	kN·m	32
Gradeability	-	35° (70%)
Ground specific pressure	kPa	50.9
Bucket digging force (SAE)	kN	107
Arm digging force (SAE)	kN	80
Maximum traction force	kN	117

Item contents	Unit	Parameters
Oil capacity		
Hydraulic oil tank capacity	L	90
Cab standard		
ISO 10262：1998 (OPG)	-	Optional
ISO 12117-2：2008 (ROPS)	-	√
Track		
Standard track shoe width	mm	500
Number of track shoes (per side)	-	46
Number of track roller (per side)	-	7
Number of track carrier roller (per side)	-	2
Standard		
Length of boom	mm	4600
Length of arm	mm	2520
Bucket capacity	m³	0.52 (Heavy duty bucket)
Optional		
Length of boom	mm	-
Length of arm	mm	-
Bucket capacity	m³	0.5/0.6/0.7 (Standard bucket) 0.43/0.6 (Heavy duty bucket) 0.52 (Rock duty bucket)